DocuSign Envelope ID: 4B2DF7C3-A409-46FF-B9D6-9905152B1267

PROJ. REFERENCE NO.	SHEET NO.
17BP.14.R.208	TMP-4

TGS ENGINEERS
804-C N. LAFAYETTE ST
SHELBY, NC 28150
PH (704) 476-0003
CORP. LICENSE NO.: C-0275

Macon County
Bridge #550180

SECTION A2 - A2 -L- STA 13+20±

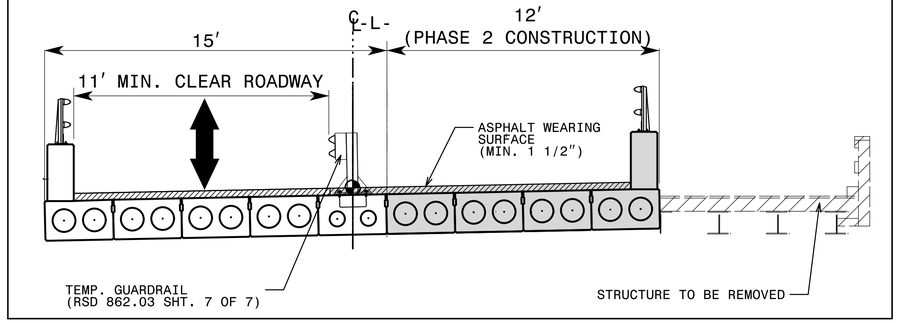

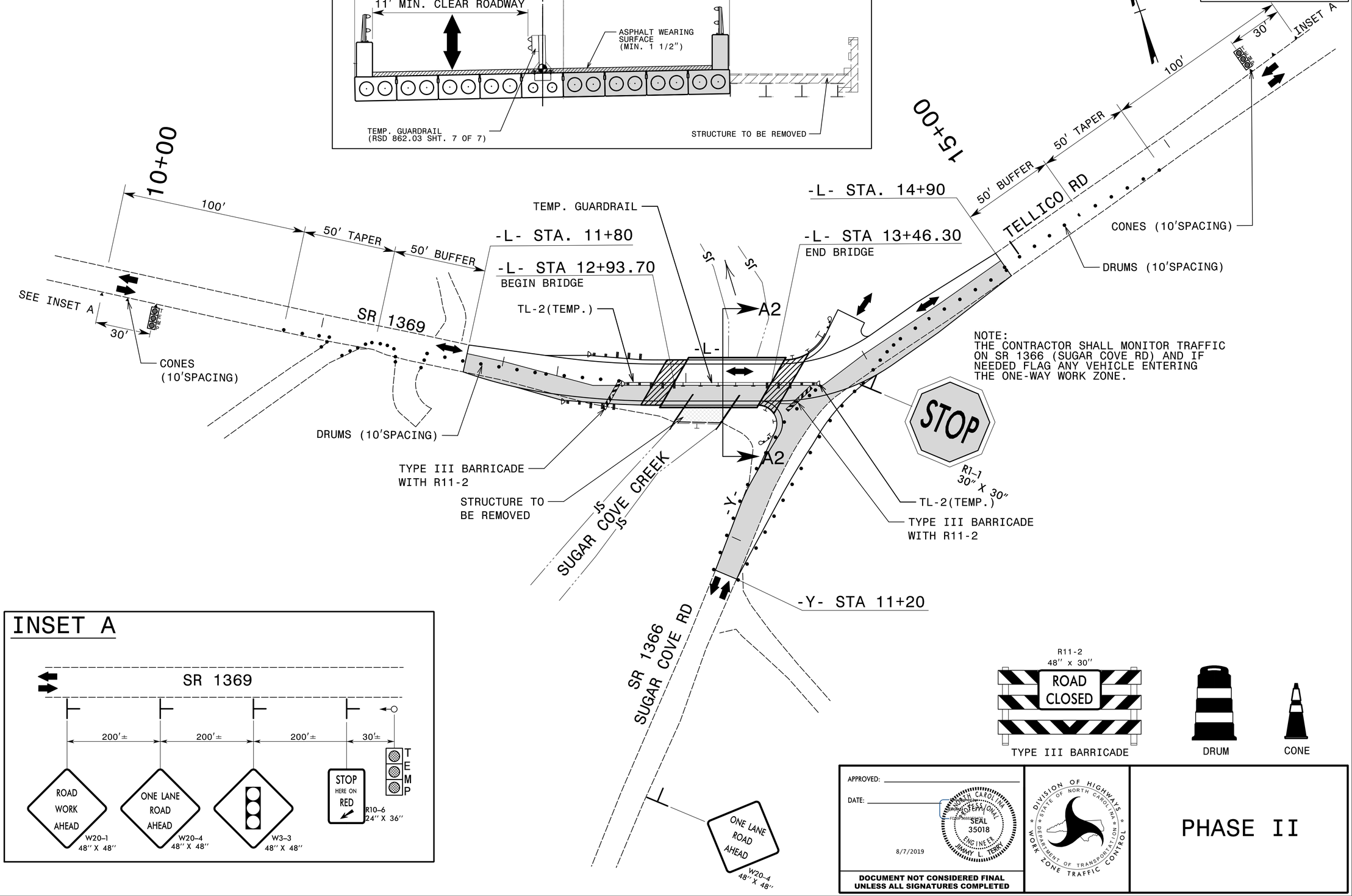

NOTE:
THE CONTRACTOR SHALL MONITOR TRAFFIC ON SR 1366 (SUGAR COVE RD) AND IF NEEDED FLAG ANY VEHICLE ENTERING THE ONE-WAY WORK ZONE.

INSET A

APPROVED: _____

DATE: _____

NORTH CAROLINA PROFESSIONAL ENGINEER SEAL 35018 JIMMY L. TERRY

8/7/2019

DOCUMENT NOT CONSIDERED FINAL UNLESS ALL SIGNATURES COMPLETED

DIVISION OF HIGHWAYS · STATE OF NORTH CAROLINA · DEPARTMENT OF TRANSPORTATION · WORK ZONE TRAFFIC CONTROL

PHASE II

8/7/2019
X:\NCDOT\Division 14 - 2017\Macon 550180\Traffic\TrafficControl\TCP\Macon_550180_TC_TMP_04(PHASE 2).dgn
User:smelvin